Hazardous Area Lighting Class I Div 1

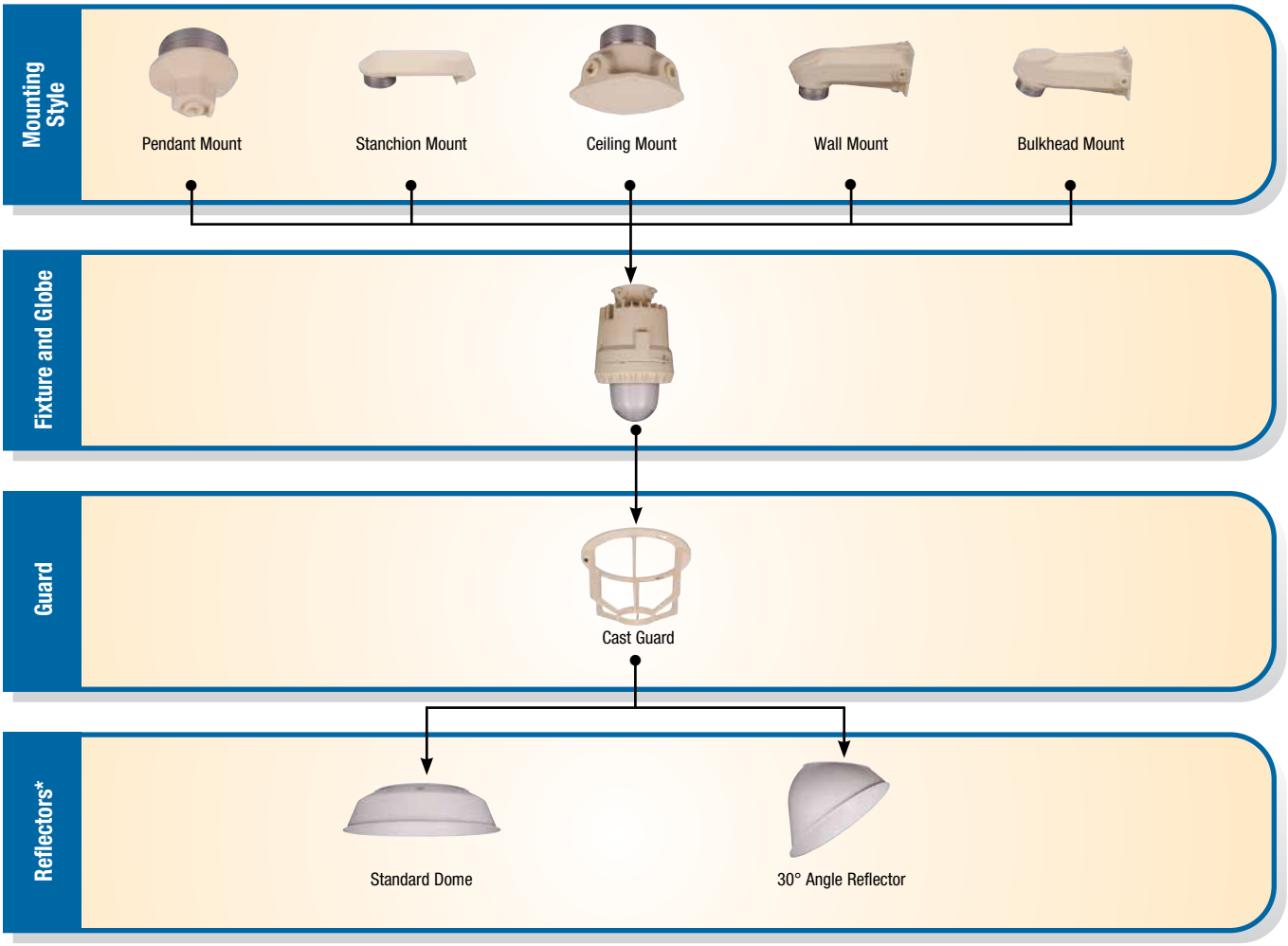

* Reflectors are sold separately. See page 72 for ordering number.

Thomas&Betts
A Member of the ABB Group

Hazardous Area Lighting Class I Div 1 Catalog Numbering System

XI	Ø	03	E	UN	G	B2	T	E	C
1	2	3	4	5	6	7	8	9	10

1 Fixture Series
- **XI =** Hazlux® 5 Induction Series

2 Starter Circuit
- **Ø =** Standard Fixture (Without Options)
- **C =** Cold Weather Circuit (-45°C)

3 Lamp Wattage
- **03 =** 35 Watts
- **05 =** 55 Watts
- **08 =** 85 Watts

4 Ballast Circuit
- **E =** Electronic Ballast

5 Voltages/Frequency
- **UN =** 120 to 277 Vac, 50/60 Hz
- **34 =** 347 Vac, 60 Hz
- **48 =** 480 Vac, 60 Hz

6 Guard
- **Blank =** No Guard
- **G =** Cast Guard

7 Mounting Style
- **B2 =** ¾" Wall Mount
- **B3 =** 1" Wall Mount
- **C2 =** ¾" Ceiling Mount
- **C3 =** 1" Ceiling Mount
- **J2 =** ¾" Bulkhead
- **J3 =** 1" Bulkhead
- **P2 =** ¾" Rigid Pendant
- **P3 =** 1" Rigid Pendant
- **S4 =** 1¼" 25° Angle Stanchion
- **S5 =** 1½" 25° Angle Stanchion

8 Special Options
- **T =** HazCote® Custom Corrosion Coating on all Aluminum Parts
- **PS =** UL® Listed Fixture for Paint Spray Areas
- **PST =** UL® Listed Fixture for Paint Spray Areas with HazCote®

9 UNIPAK™ Options
- **E =** UNIPAK™ with Induction Lamp

10 Certification
- **C =** Canadian Market

***Note**: Verify hazardous location certification with your requirements on Hazlux® 5 Certification Guide on **page 63**.*

Class I — Division 1, Groups C and D
— Zone 2, Groups IIC, IIB and IIA
— Division 2, Groups A, B, C and D
Class II — Division 1 and 2, Groups E, F and G

- UL® Listed (UL1598A) for Marine Locations
- UL844
- NEMA 4X, IP66
- CSA C22.2 No 137 standard

Contact your Thomas & Betts sales representative to verify classification.

Mounting Options

Pendant Mount

Stanchion Mount

Ceiling Mount

Wall Mount

Bulkhead Mount

CAT. NO.	DESCRIPTION	CONDUIT HUB SIZE	STD. PKG.
XP2	Pendant Mount	¾	1
XP3		1	
XS4	Stanchion Mount	1¼	1
XS5		1½	
XC2	Ceiling Mount	¾	1
XC3		1	
XB2	Wall Mount	¾	1
XB3		1	
XJ2	Bulkhead Mount	¾	1
XJ3		1	

Outlet Boxes include female electrical connectors and appropriate close-up plugs.

Guards

XGU44 Cast Aluminum Guard

CAT. NO.	DESCRIPTION
XGU44	Cast Aluminum Guard

Replacement Globe Assemblies

CAT. NO.	DESCRIPTION
XGSA44	Hazlux 5 Replacement Globe Assembly

Reflectors

Standard Dome

30° Angle Reflector

CAT. NO.	DESCRIPTION
VR31P	Standard Dome, Fiberglass-Reinforced Polyester
VRA31P	30° Angle Reflector, Fiberglass-Reinforced Polyester

Note: Reflectors are shipped bulk unless specified

Dimensions — Hazlux® 5 Fixtures

Bulkhead Mount with Globe, Guard and Reflector

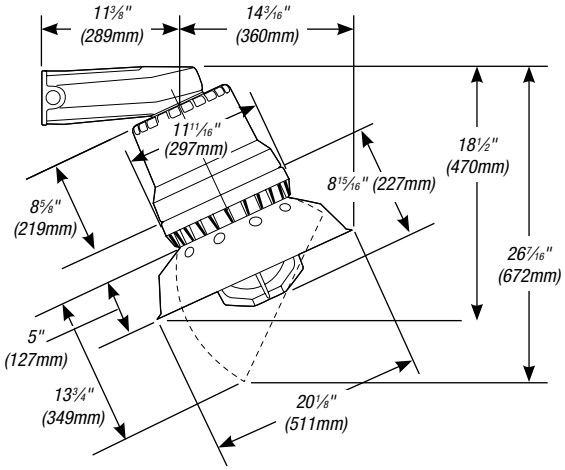

Stanchion Mount with Globe, Guard and Reflector

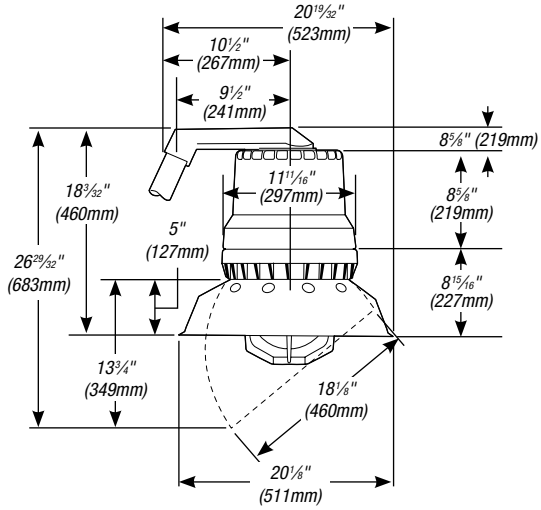

Wall Mount with Globe and Guard

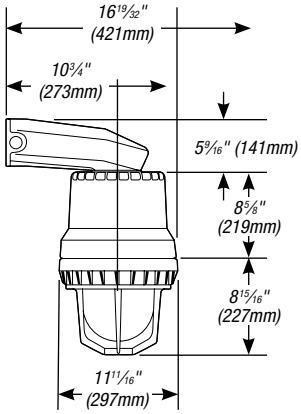

Photometry — Hazlux® 5 Fixtures

Ceiling Mount

Reference Data

Catalogue No.	**XI085EUNC2E**
Lamp	85W Induction lamp
Lamp Lumens	N.A. (absolute)
Input Watt	80.45
Luminaire Lumens	3633
Efficiency	N.A.
Efficacy Rating (LER)	45
Spacing Criterion (0-180)	1.50
Spacing Criterion (90-270)	1.50
Spacing Criterion (diagonal)	1.80

Candlepower Curve

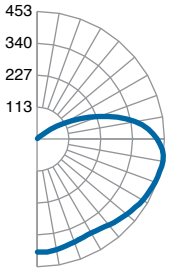
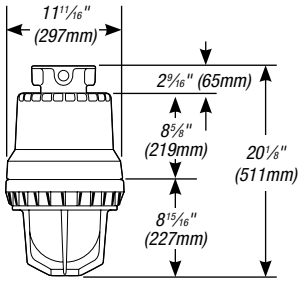
Ceiling Mount with Globe and Guard